

VOIP KNSP-08-IP-Y Loudspeaker Telephone

DESCRIPTION ITEM NO

1. Robust aluminium alloy die-cast body, Vandal & tamper-resistant hardware, easy Installation.
2. Waterproof rating IP66 dust proof.
3. With external 30W loud speaker. Material: metal. Impeddance:8Ω.Freq.Resp:300-7000HZ. S.P.L:(1M/W):108dB. Megenet: ALum
4. Full keypad with memory, 3 button programmable telephone ,support hotline dialing, support scroll dialing.
5. Magnetic reed hook-switch.
6. DC input overvoltage overcurrent protection and RJ 45 surge protection.
7. Heavy Duty handset with hearing Aid compatible (HAC) receiver, Noise canceling microphone.
8. Handset with industrial strong curly cord .
9. Silicon keypad keep waterproof and dusty proof.
10. Door cover: orient automatically and good self - closing, convenient for use.
11. Temperature range from -40 degree to +70 degree.
12. Support echo cancellation.
13. Support Remote software upgrade, configuration and monitoring.
14. Optional 7 minute time-limited call.(This function upon buyer's requirement).
15. Powder coated in UV stabilized polyester finish.
16. Application: Tunnel, metro, railway, LRT, speedway, marine, ship,offshore, mine, power plant, bridge etc.



SPECIFICATION

VoIP SIP2.0 telephone DTMF dialing
MTBF:100000hours MTTR: 2 hours
Free dial (maximum length of each number is 32 digits)
Communication: Full duplex 2-way
Call Control Signaling:VOIP SIP Info(DTMF), RFC 2833(DTMF)
Power:Power over Ethernet, IEEE802.3af, Class 0
Local power, Input : AC 220V

Audio Codes:G.711, G.723,G.726, G.729
Network:10/100 BaseTX Ethernet, RJ45 connectors, Cat5e or better
IP Protocols:IPv4, TCP, UDP, RTP, DHCP, SIP
1 x LAN Power over Ethernet(PoE,802.3af)
1 x LAN(IEEE 802.1x), Network Access Control(IEEE 802.1x),STP(IEEE 802.1d), RSTP(IEEE 802.1d-2004)
Programming:Non-volatile flash memory programming and configuration through Web GUI
Management and Operation:DHCP and static IP, remote automatic software upgrade, centralized monitoring
Echo cancellation code: ITU-T G.167/G.168

Order information:

Model number	Power Supply	Item Number
KNSP-08-IP-Y_T110	AC110V	SP0080042
KNSP-08 -IP-Y_T220	AC220V	SP0080021

*T110---AC 110VTransformer with Tripod flat / octagonal

*T220---AC 220VTransformer with Tripod flat / octagonal

CERTIFICATION

Australian communications:AS/CA S004
Australian Equipment-safety: AS/NZS 60950.1:2015
RCM: AS/NZS CISPR 32
EMC:EN55032, EN55024,EN61000-3-2

CE FC IP66 RoHS

INSTALLATION

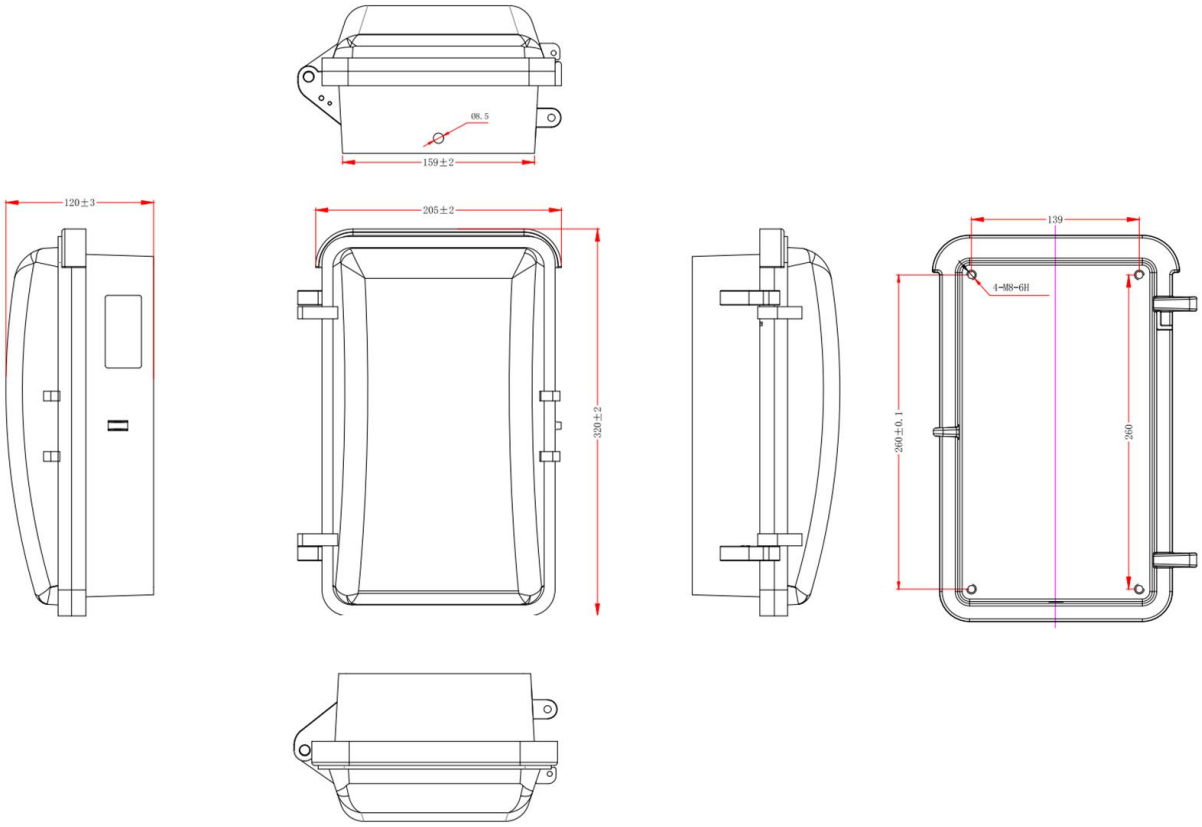

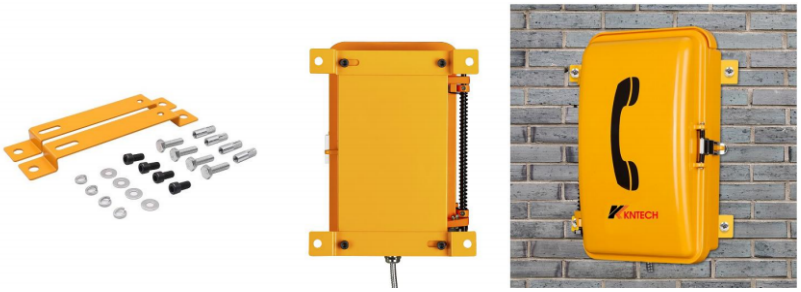

PACKAGING

Unit size:320 *205*120mm Unit: N.W:5.8KG+Speaker：1.5KG

1pcs packing box size: 439 *277 *191mm Unit N.W:6.8KG +1.5KG

6pcs in 1 outer Carton box: size: 730*390*340mm N.W:42KG+10.5KG



KNTECH
HONGKONG KOON TECHNOLOGY LTD
TEL:0086755 29790158/27448753 Fax:0086755 29790278
Email:marketing@koontech.com www.koontech.com